CHIEF OVERDRIVE 4 SPEED GEARBOX INSTALLATION

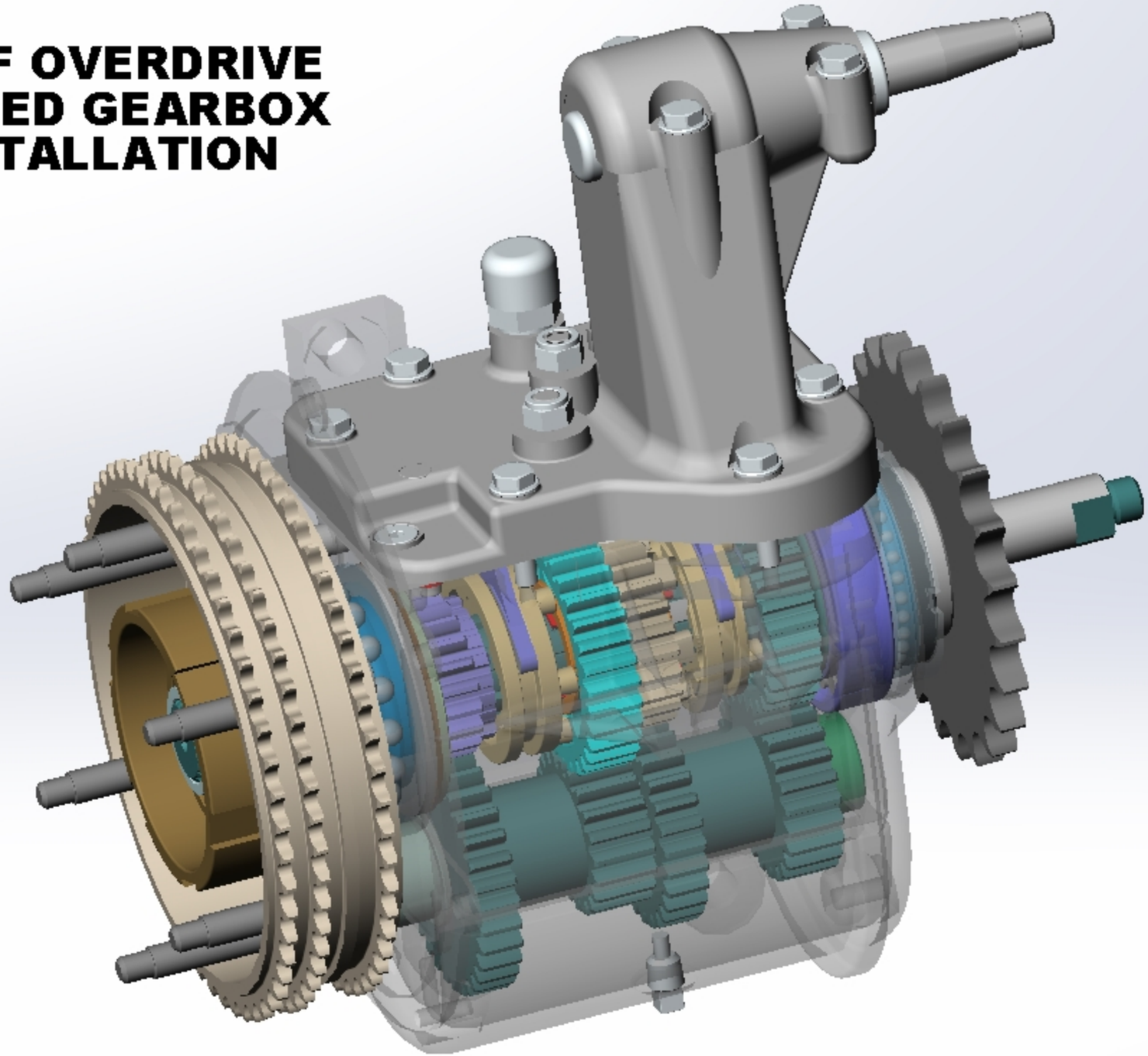

WARRANTY

SLC PARTS INC., WARRANTS THIS GEARBOX FOR AN UNMODIFIED 1934 THRU 1953 INDIAN CHIEF FOR 10,000 MILES OR 1 YEAR (WHICHEVER COMES FIRST), EXCEPT WITH RESPECT TO COMPONENT PRODUCTS MANUFACTURED BY OTHERS, THAT ALL PRODUCTS IT MANUFACTURES OR WHICH BEAR THE NAME CHIEF-OVERDRIVE, WILL BE FREE FROM DEFECTS IN MATERIAL AND WORKMANSHIP UNDER NORMAL USE, SERVICE OR PROPER OPERATION AT THE DATE OF SHIPMENT TO THE PURCHASER. PURCHASERS SOLE REMEDY UNDER THIS WARRANTY SHALL BE LIMITED TO REPLACEMENT OF PRODUCT, REPAIR BY SLC Parts Inc, OR A REFUND OF THE AMOUNT PAID BY THE PURCHASER OF SUCH PRODUCTS AT SLC Parts Inc., OPTION.
NO WARRANTY OF ANY KIND SHALL EXIST WITH RESPECT TO ANY PRODUCTS (OR PARTS THEREOF) ; (a) WHICH HAVE BEEN SUBJECT TO ABUSE, NEGLIGENCE OR ACCIDENT OR WHICH HAVE BEEN TAMPERED WITH, REPAIRED, REPLACED OR ALTERED BY ANYONE OTHER THAN SLC Parts Inc.,; (b)WHERE THERE HAS BEEN SUBSTITUTION OF PARTS NOT MANUFACTURED OR AUTHORIZED BY SLC Parts Inc., OR; (c) WHERE THE PRODUCTS HAVE BEEN SUBJECTED TO CONDITIONS WHICH VARY MATERIALLY FROM THE CONDITIONS WHICH SUCH PRODUCTS ARE NORMALLY SUBJECTED TO ; (d) WHICH HAVE BEEN USED IN PERFORMANCE COMPETITION, RACING OF ANY KIND, TESTING OR ILLEGAL ACTIVITY

SLC Parts Inc. MAKES NO WARRANTIES OF ANY KIND, EXPRESSED OR IMPLIED, OTHER THAN AS HEREIN EXPRESSLY PROVIDED, AND SPECIFICALLY DISCLAIMS ALL OTHER WARRANTIES INCLUDING THE IMPLIED WARRANTIES OF MERCHANTABILITY AND OF FITNESS FOR A PARTICULAR PURPOSE SLC Parts Inc. DISCLAIMS ANY OBLIGATION OR LIABILITY FOR LOSS OF TIME, COST OR EXPENSE (INCLUDING, WITHOUT LIMITATION, LABOR EXPENSE), INCONVENIENCE, COMMERCIAL LOSS OR ANY OTHER DIRECT, INDIRECT CONSEQUENTIAL, SPECIAL OR INCIDENTAL DAMAGES.

Cut ----------

Mail registration to SLC Parts Inc
3110 Indian Ave. Ste A
Perris, Ca 92571

Serial no:_____ E-MAIL_____

Name:_____ Date of purchase_____

Address_____ Dealer_____

---------- Type of Chief_____

SIGNATURE_____

Additional instruction prior to shimming the clutch basket; Place a puller on the output drive sprocket with the screw centered on the mainshaft and tighten the screw to ensure the internal gearbox main bearings are seated. (Do not over-tighten). Leave the puller attached with tension on it until the shimming is complete and the clutch basket nut is tightened and locked. The reason for doing this is to assure that the basket is not unintentionally over shimmed due to the clutch side main bearing being displaced.

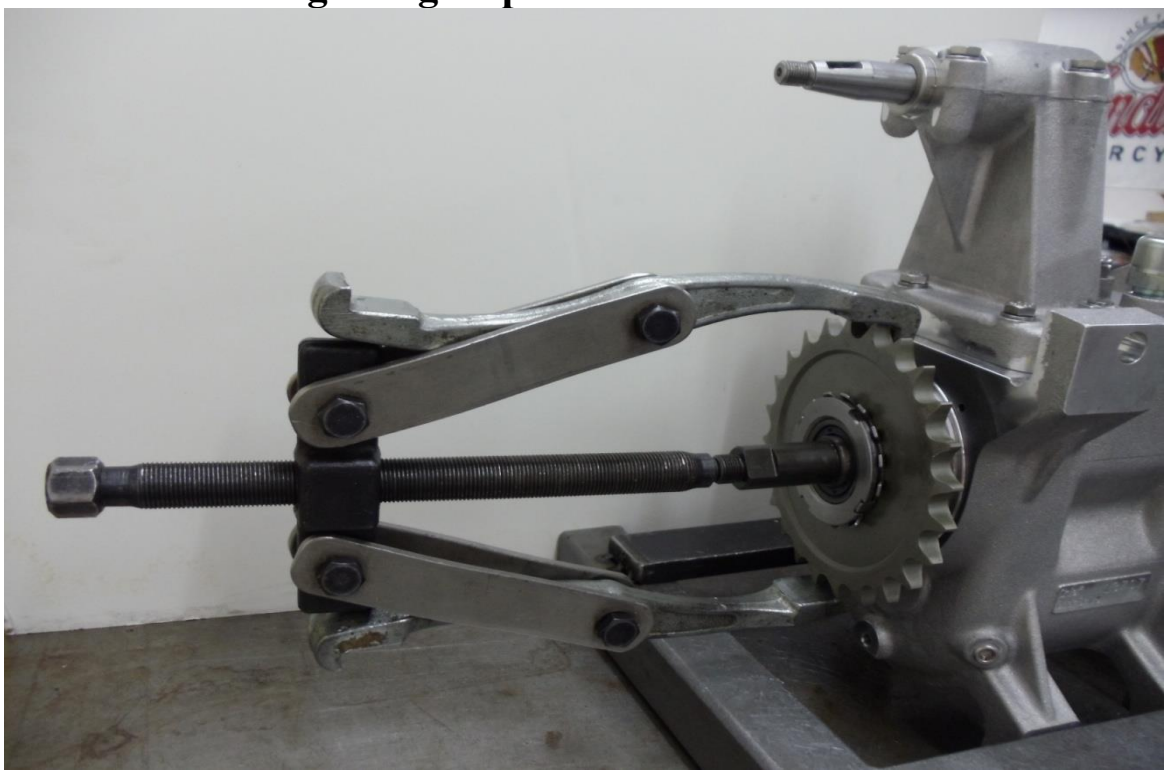

ASSEMBLY OF CHIEF OVERDRIVE CLUTCH BASKET

The following instructions are a guide for installing the clutch basket with a few comments as to the reasons for following the P order of assembly.

When you receive your new gearbox the clutch core and basket will have to be removed to allow shimming of the basket to meet the .003 inch alignment of the engine and clutch sprockets as required to prevent damage or excessive wear of the primary chain.

It may also be advisable to verify the fit of the gearbox case to the engine crankcase and remove any slight casting interference that may exist.

Figures 1 an 2 show an exploded view and cross section of the basket assembly.

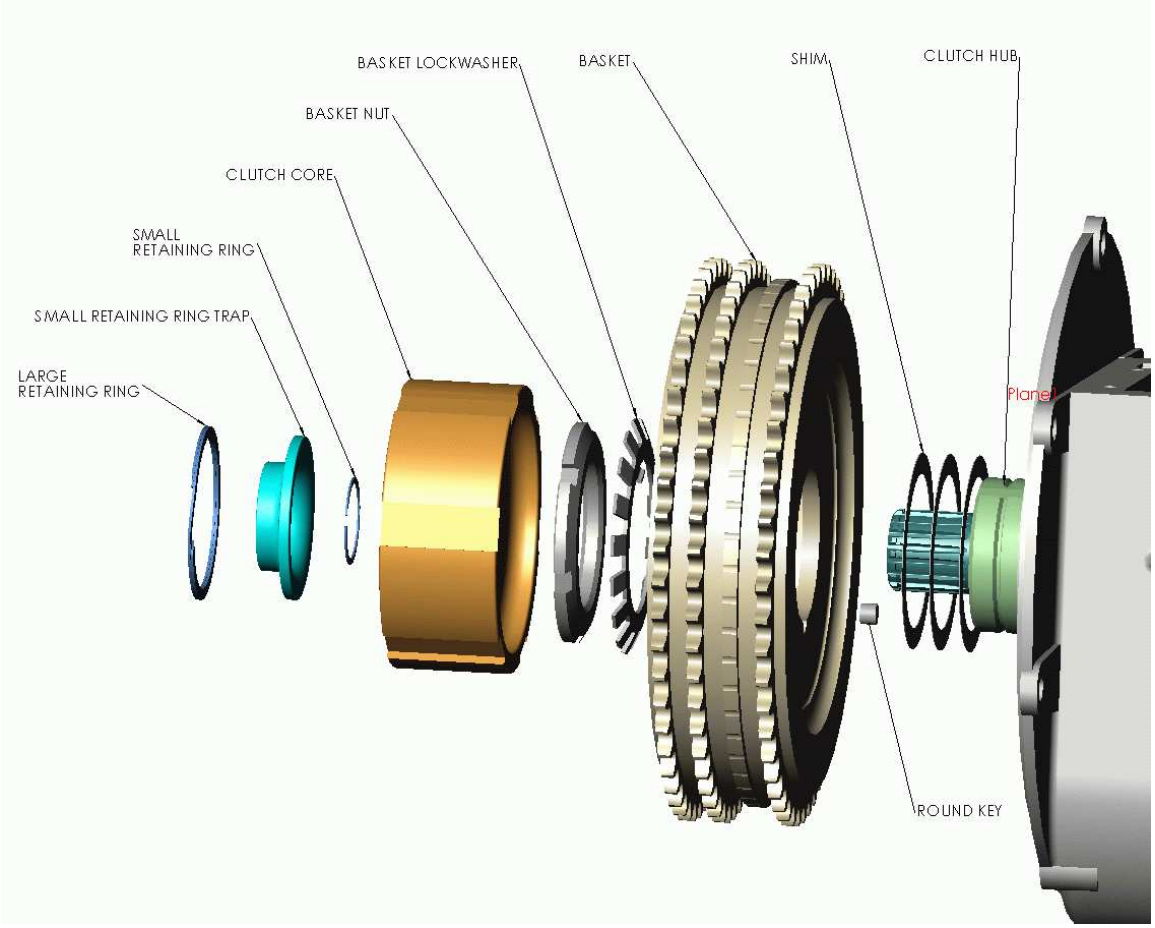

FIGURE 1

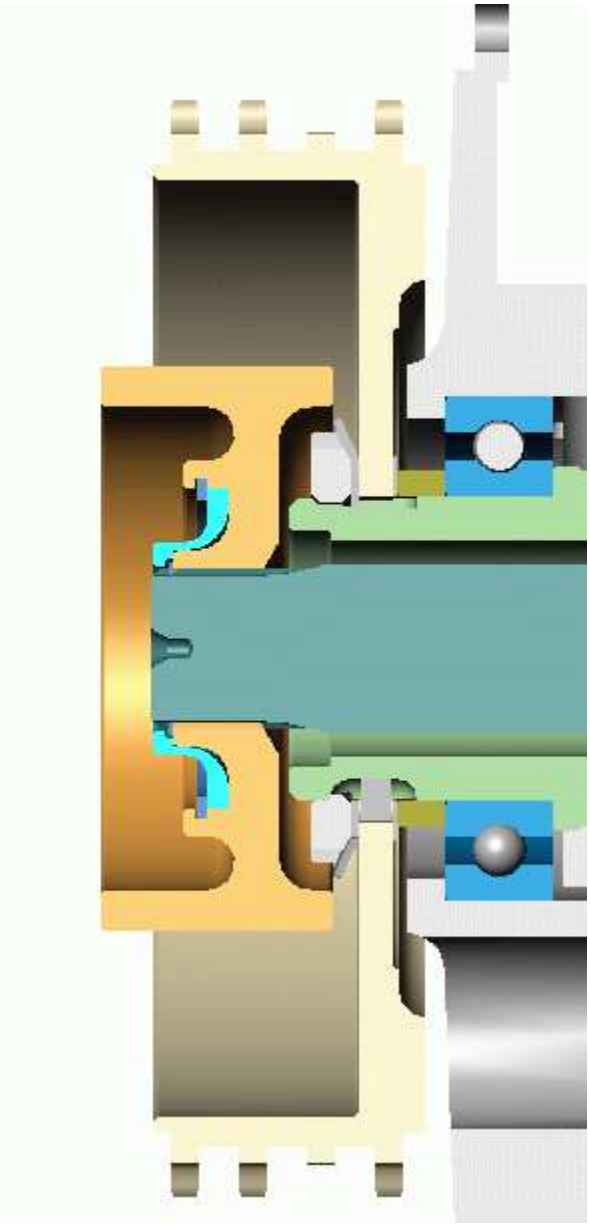

0

FIGURE 2.

Alignment of the clutch basket is accomplished by shimming on the case side of the basket, and should be verified with the nut tight.
.005, .008, and .032 shims are provided to arrange in the necessary combination (see page 11) to effect the correct alignment. See FIGURE 3

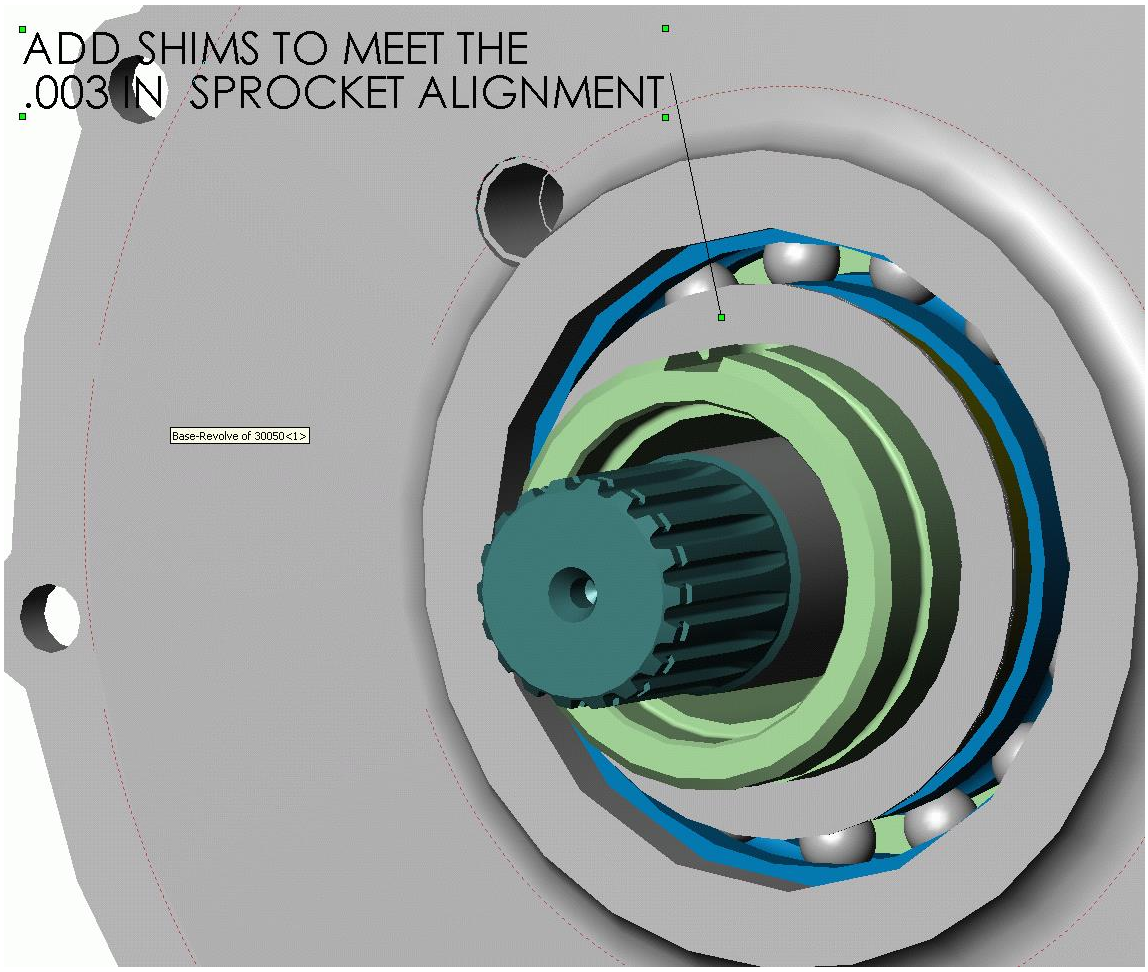
ADD SHIMS TO MEET THE
.003 IN SPROCKET ALIGNMENT
Base-Revolve of 30050<1>

FIGURE 3.

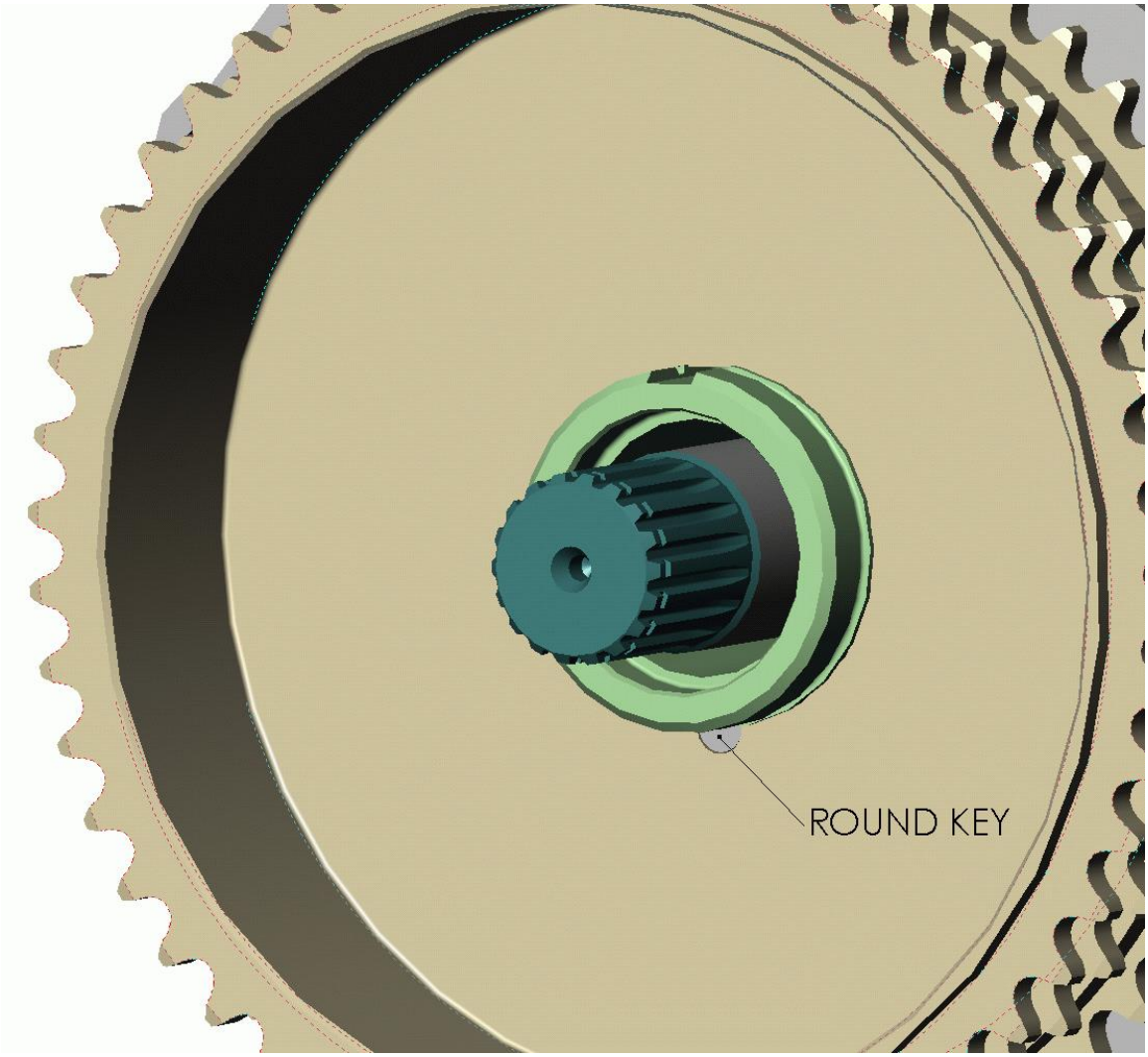

FIGURE 4.

When tightening the nut, make sure that the round key is in place as shown in FIGURE 4. The key does not take any load, but is there to prevent the thread from turning with the nut during assembly and dis-assembly, especially if loctite is used during final assembly.

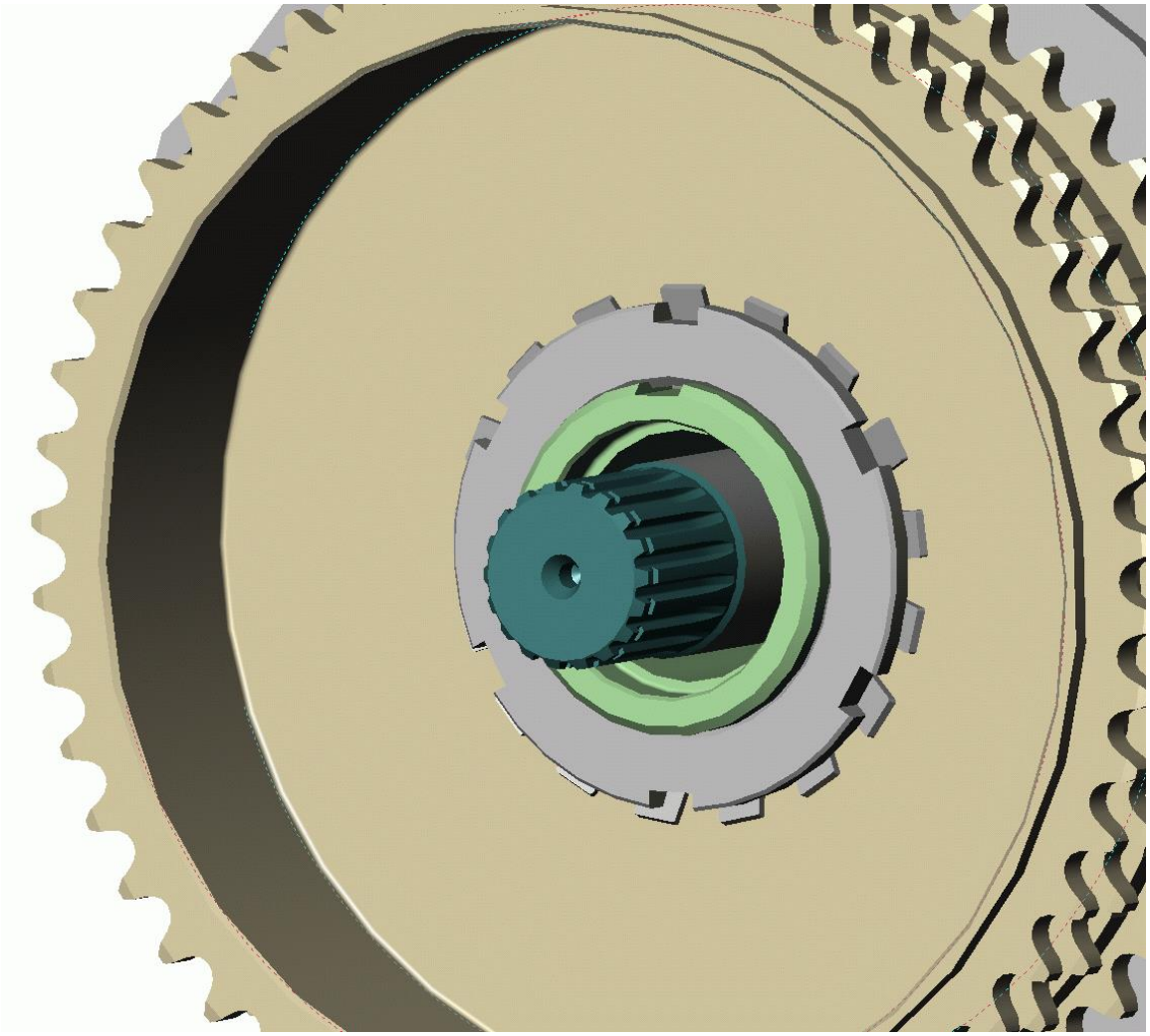

FIGURE 5.

When alignment has been accomplished and the nut finally tightened, bend over one locking tab of the lock-washer into a slot in the nut.

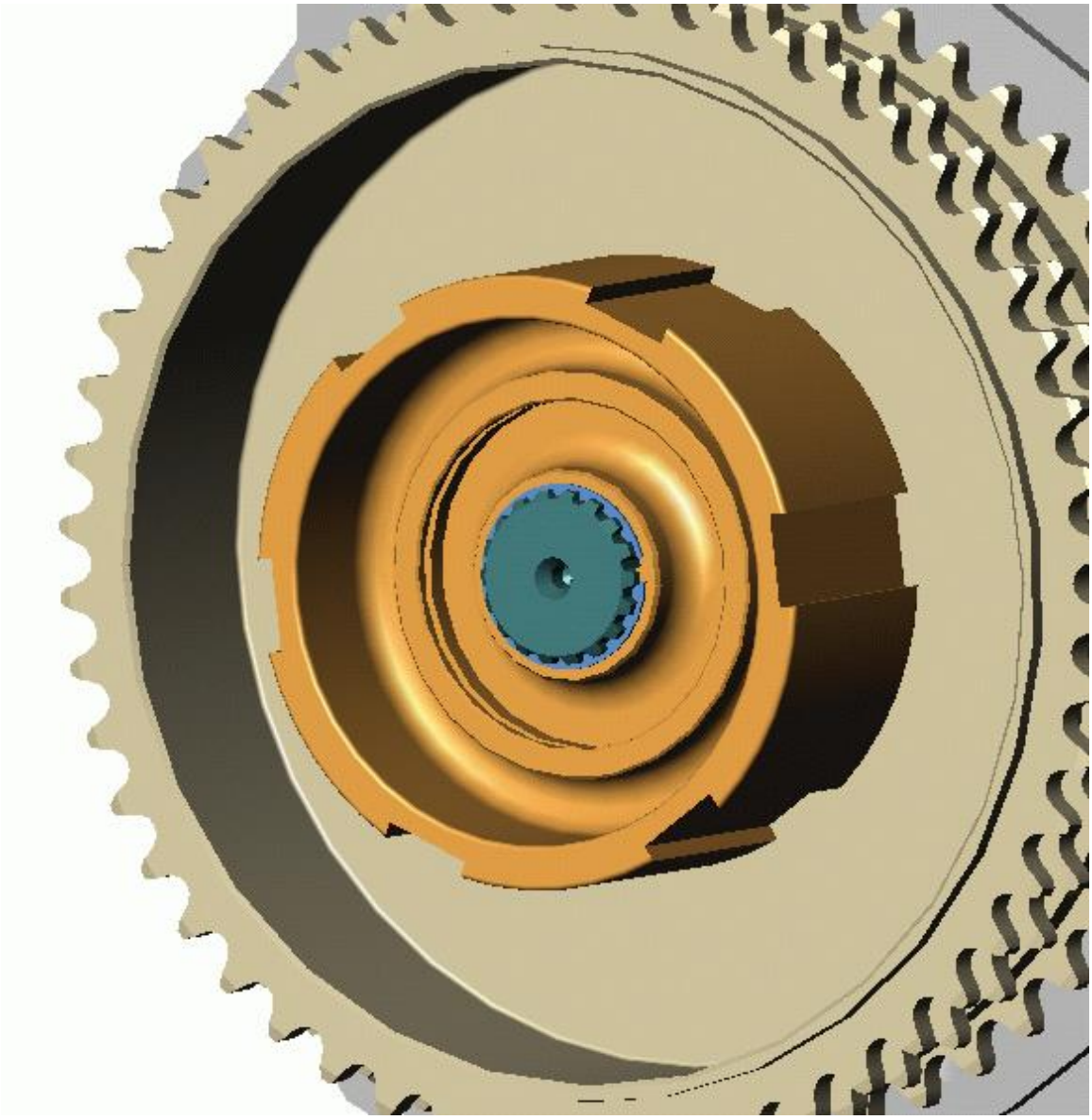

FIGURE 6.

Install the clutch core and small retaining ring on to the shaft.

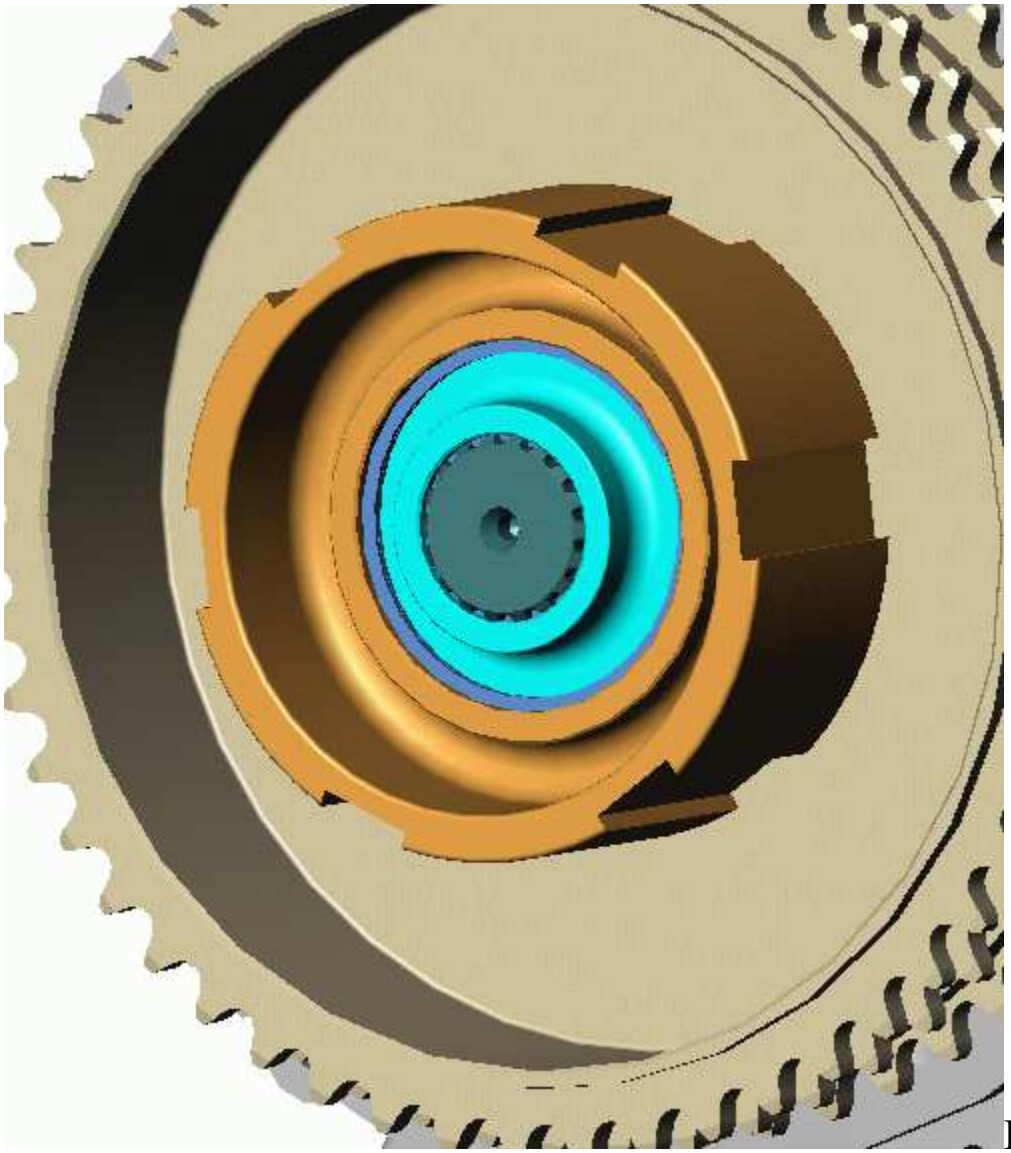

P

FIGURE 7.

Install the retaining ring trap and the large retaining ring. The clutch core will have to be held against the small retaining ring to allow the large retaining ring to enter its' groove. (Placing a bent piece of stiff cardboard behind the clutch core will help hold the core in place but do not forget to remove it when finished installing the large ring)

You are now ready to assemble the clutch.

The top cover (Tower) on your new gearbox needs to be removed to allow the two top retaining bolts to the engine to be installed.

To replace the cover it is best if the gears are in neutral and the gear change cam is also in the neutral position.
Do not use a gasket plate as this will affect the engagement of the shift cam to the shift forks.
Fill the gearbox with 10 to12 fluid ounces (300 to 350 ml) of 85/140 synthetic gear oil and replace the cover using a smear of good quality non hardening gasket cement. (Gray silicone works well)

OUTPUT FOR ONE TURN OF INPUT

GEARBOX:	OLD 3 SPEED	4 SPEED HI	4 SPEED LO
FIRST	0.405	0.507	0.436
SECOND	0.711	0.743	0.689
THIRD	1.000	1.000	1.000
OVERDRIVE		1.355	1.166

INPUT FOR ONE TURN OF OUTPUT

GEARBOX:	OLD 3 SPEED	4 SPEED HI	4 SPEED LO
FIRST	2.469	1.972	2.291
SECOND	1.406	1.346	1.452
THIRD	1.000	1.000	1.000
OVERDRIVE		0.738	0.858

SHIMMING	0.005	0.008	0.032	DELTA
.005	1			
.008		1		0.003
.010	2			0.002
.013	1	1		0.003
.016		2		0.003
.018	2	1		0.002
.021	1	2		0.003
.024		3		0.003
.026	2	2		0.002
.029	1	3		0.003
.032			1	0.003
.034	2	3		0.002
.037	1		1	0.003
.040		1	1	0.003
.042	2		1	0.002
.045	1	1	1	0.003
.048		2	1	0.003
.050	2	1	1	0.002
.053	1	2	1	0.003
.056		3	1	0.003
.058	2	2	1	0.002
.061	1	3	1	0.003
.064			2	0.003
.066	2	3	1	0.002
.069	1		2	0.003
.072		1	2	0.003
.074	2		2	0.002
.077	1	1	2	0.003
.080		2	2	0.003
.082	2	1	2	0.002
.085	1	2	2	0.003
.088		3	2	0.003
.090	2	2	2	0.002
.093	1	3	2	0.003

ITEM	NAME	CHIEF P/N	ITEM	NAME	CHIEF P/N	ITEM	NAME	CHIEF P/N
1	RETAINING RING	30035	31	FINAL DRIVE GEAR*	30008*	71	RETAINER-QUADRANT	30031
2	RETAINER-CLUTCH CORE	30063	33	BEARING SPACER	30058	72	LOCKNUT	30083
3	RETAINING RING	30040	34	SEAL	30069	73	CAM DRIVE GEAR	30009
4	CLUTCH-CORE	30049	36	SPACER -OUTPUT SIDE****	30046****	74	CAM	30025
5	NUT-CLUTCH BASKET	30006	40	SEAL	30073	75	RETAINER-CAM	30030
6	TAB WASHER-CLUTCH	30007	41	TAB WASHER-SPROCKET	30074	76	SHIFT SHAFT	30019
7	CLUTCH BASKET	30053	42	NUT-SPROCKET	30004	77	INPUT ARM	30027
8	SHIM SET	30043	43	RETAINING RING	30075	78	TAPER PIN	30037
9	SPACER-INPUT SIDE	30047	44	O-RING	30076	79	BUSHING-BLIND $$	30084 $$
10	SEAL CLUTCH	30045	47	NEEDLE BEARING	30077	80	BUSHING	30085
11	SEAL	30048	48	BEARING SPACER	30059	81	O-RING	30086
12	BALL BEARING	30054	49	LAYSHFT-INPUT SIDE	30012	82	CAP	30041
13	NEEDLE BEARING	30055	50	LAYSHAFT-DRIVE END ##	30013##	83	HEX HEAD SCREW	30087
14	CLUTCH HUB	30061	53	CASE	30050	84	WASHER	30088
15	THRUST WASHER	30056	54	MAGNETIC PLUG	30078	85	BREATHER	30089
16	THRUST BEARING	30057	55	OIL LEVEL PLUG	30079	86	FLAT SOCKET SCREW	30090
17	FIRST GEAR PINION	30001	56	RETAINING SCRW	30062	87	HEX HEAD SCREW	30091
18	WEAR RING	30039	57	SHAFT-FORK	30018	88	SPROCKET**	30060**
19	SLIDER INPUT END	30014	58	FORK INPUT SIDE	30024	89	BUSHING	30092
20	BEARING	30020	59	FORK -DRIVE SIDE	30023	90	BASKET STUD	30093
21	OVERDRIVE GEAR	30005	60	O-RING	30080	91	RETAINING RING	30095
22	THRUST WASHER	30038	61	CAM GEAR	30026	93	BEARING RETAINER	30106
23	KEY	30021	62	COVER	30036	94	SECONDARY SHAFT	30104
24	MAINSHAFT***	30016***	63	RETAINER DETENT SPRING	30033	95	ANTI-ROTATION PIN	30097
25	SECONG GEAR PINION	30003.#	64	RETAINER DETENT ARM	30032	96	ANTI-ROTATION PIN	30096
26	SLIDER DRIVE END	30015	65	DETENT ARM	30028	97	BUSHNG-OUTPUT SIDE	30105
27	RETAINING RING	30065	66	DETENT ROLLER	30029	98	BUSHING-INPUT SIDE	30107
28	THRUST WASHER	30044	67	COTTER PIN	30081			
29	RETAINING RING	30066	68	RETAINER DETENT ROLLER	30034			
30	NEEDLE BEARING	30067	69	DETENT SPRING	30082			
			70	QUADRANT	30010			

NOTES:

* 30008-1 FOR SPRING FRAME, 30008-2 FOR RIGID FRAME, 30008-3 FOR LOW RATIO SPRING FRAME, 30008-4 FOR LOW RATIO RIGID FRAME.

** 30060 DASH NUMBER FOR NUMBER OF TEETH (19-26)

*** 30016-1 FOR SPRING FRAME, 30016-2 FOR RIGID FRAME

30003-1 FOR HIGH RATIO, 30003-2 FOR LOW RATIO

^^^^ 30046-1 FOR SPRING FRAME, 30046-2 FOR RIGID FRAME

30013-1 FOR HIGH RATIO, 30013-2 FOR LOW RATIO

FOR LEFT HAND SHIFTER ADD 30084-1 BLIND BUSHING AND 30108 RETAINING RING (YOU SUPPLY SHIFTER)

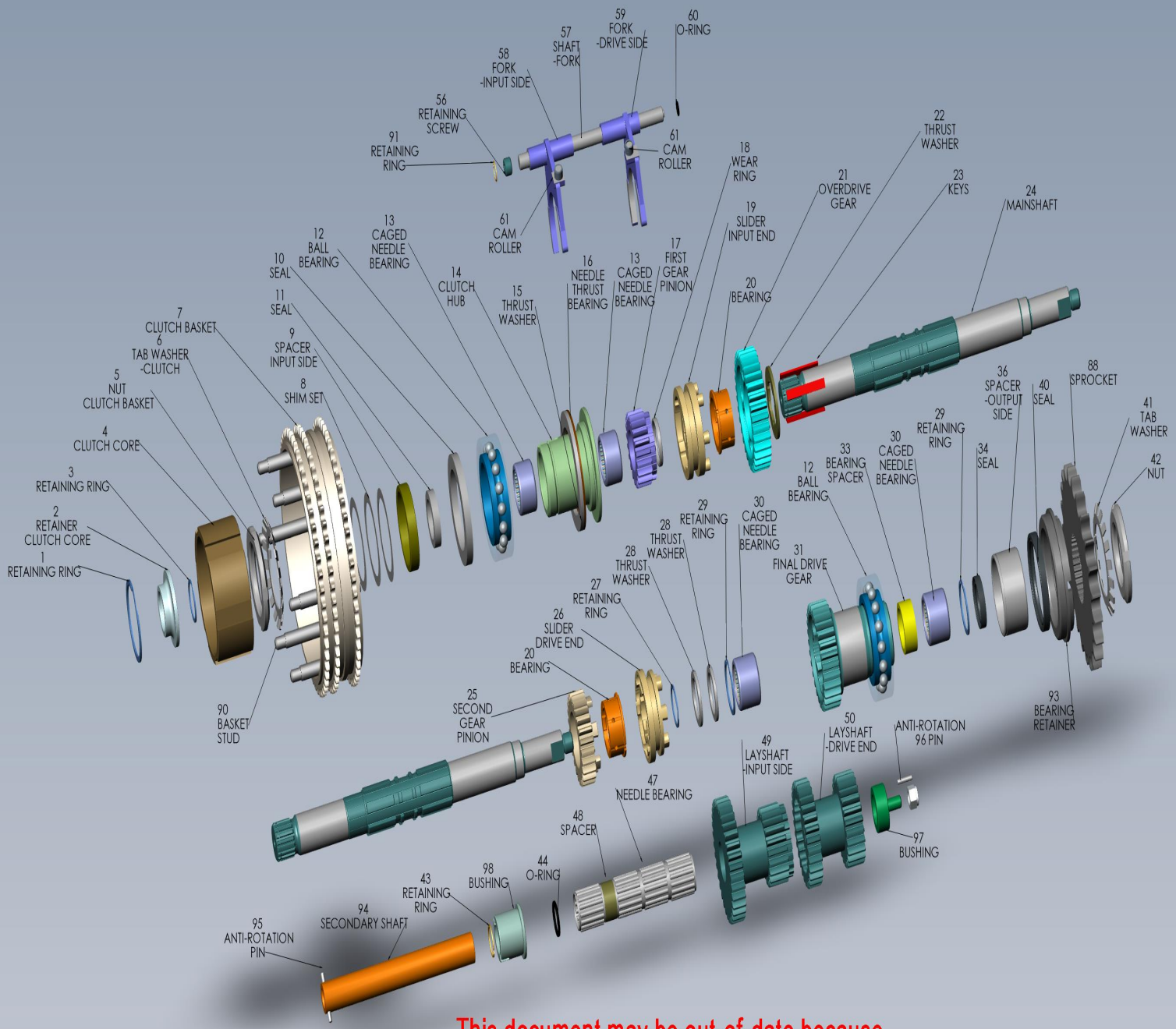

INTERNALS

This document may be out-of-date because
it has file references that may have been updated. (more...)

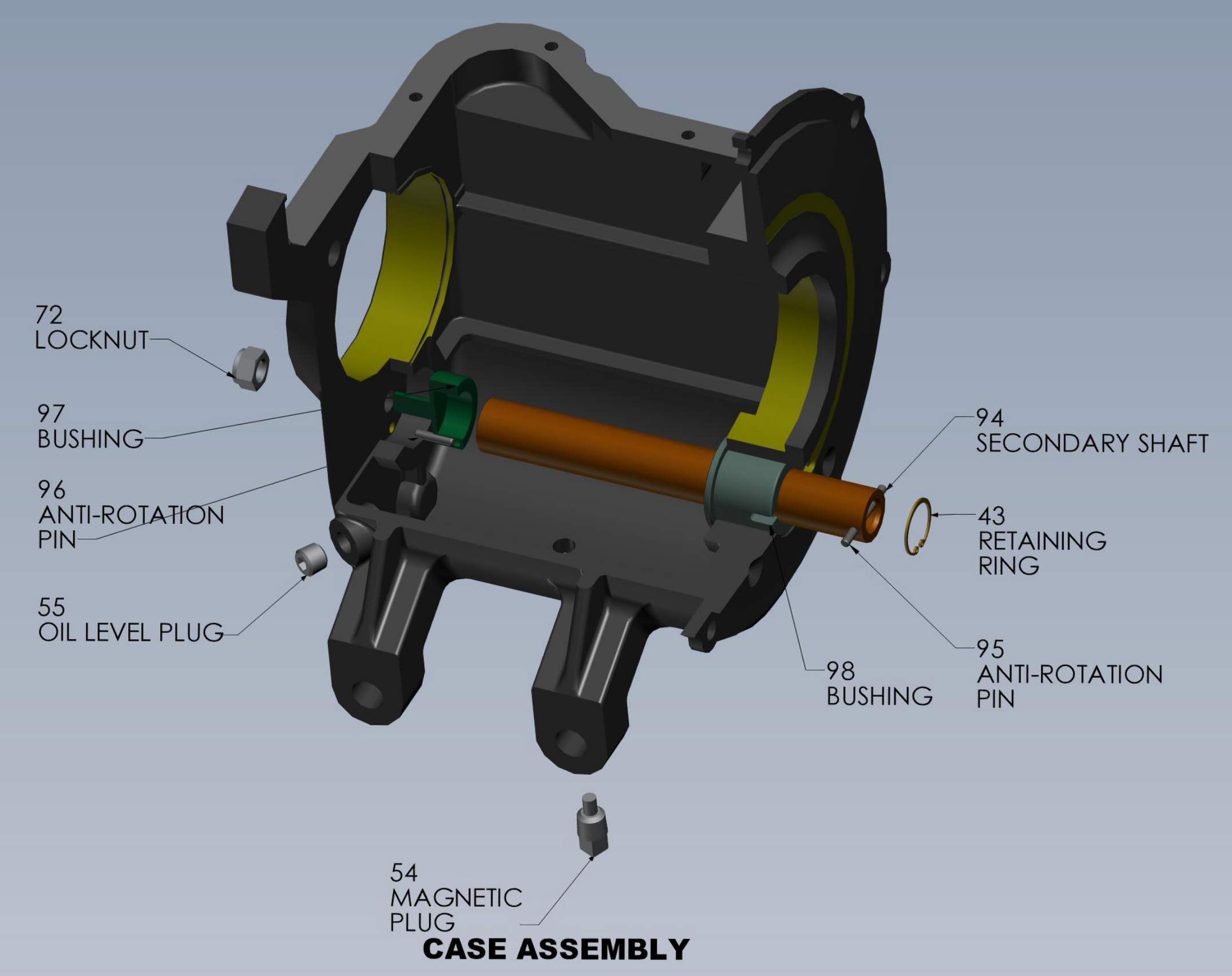

CASE ASSEMBLY

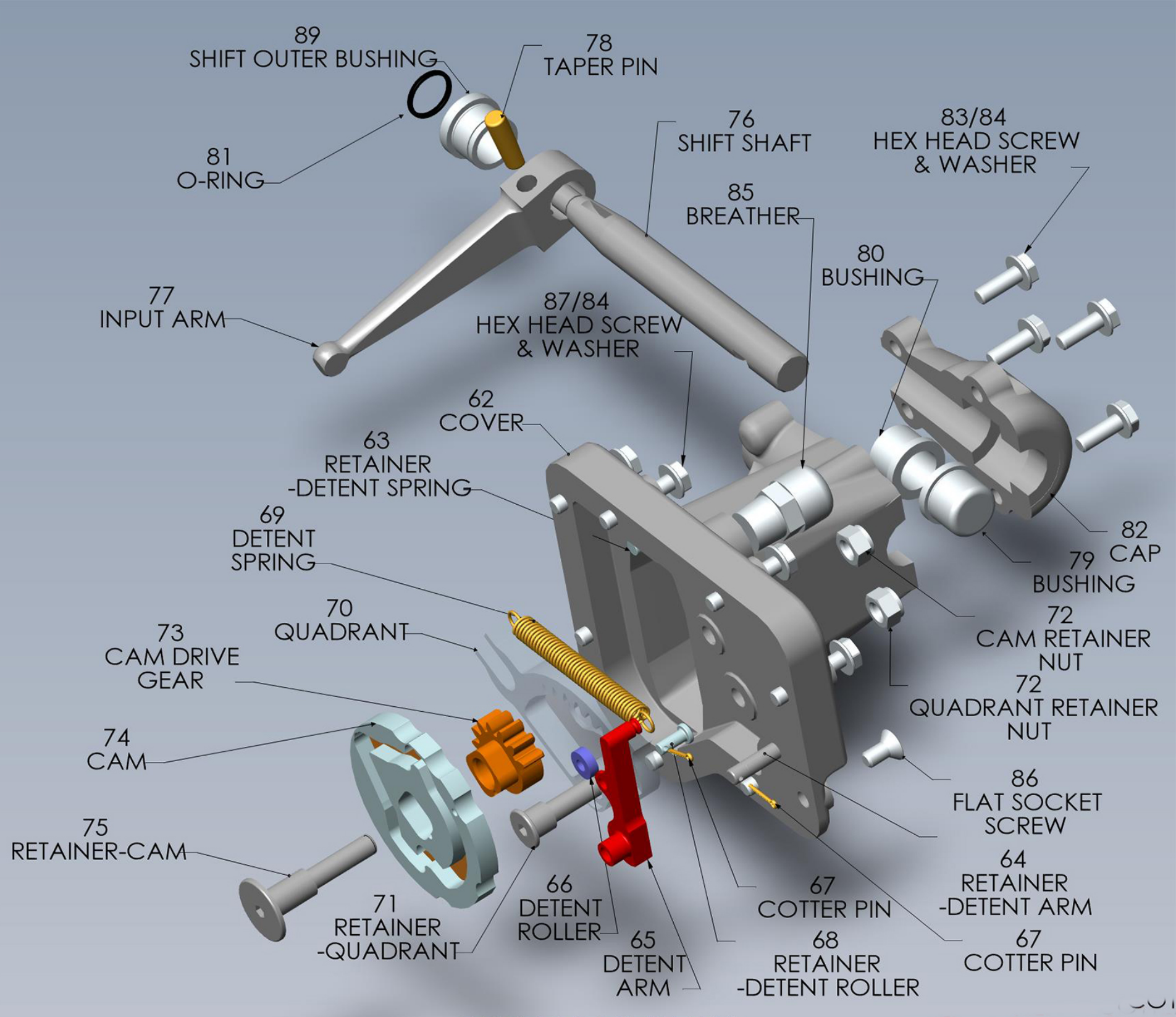

COVER ASSEMBLY